MACHINE PARTS CHART
for
SINGER*
20U

THE SINGER COMPANY

From the library of: Superior Sewing Machine & Supply LLC

SINGER*

20U

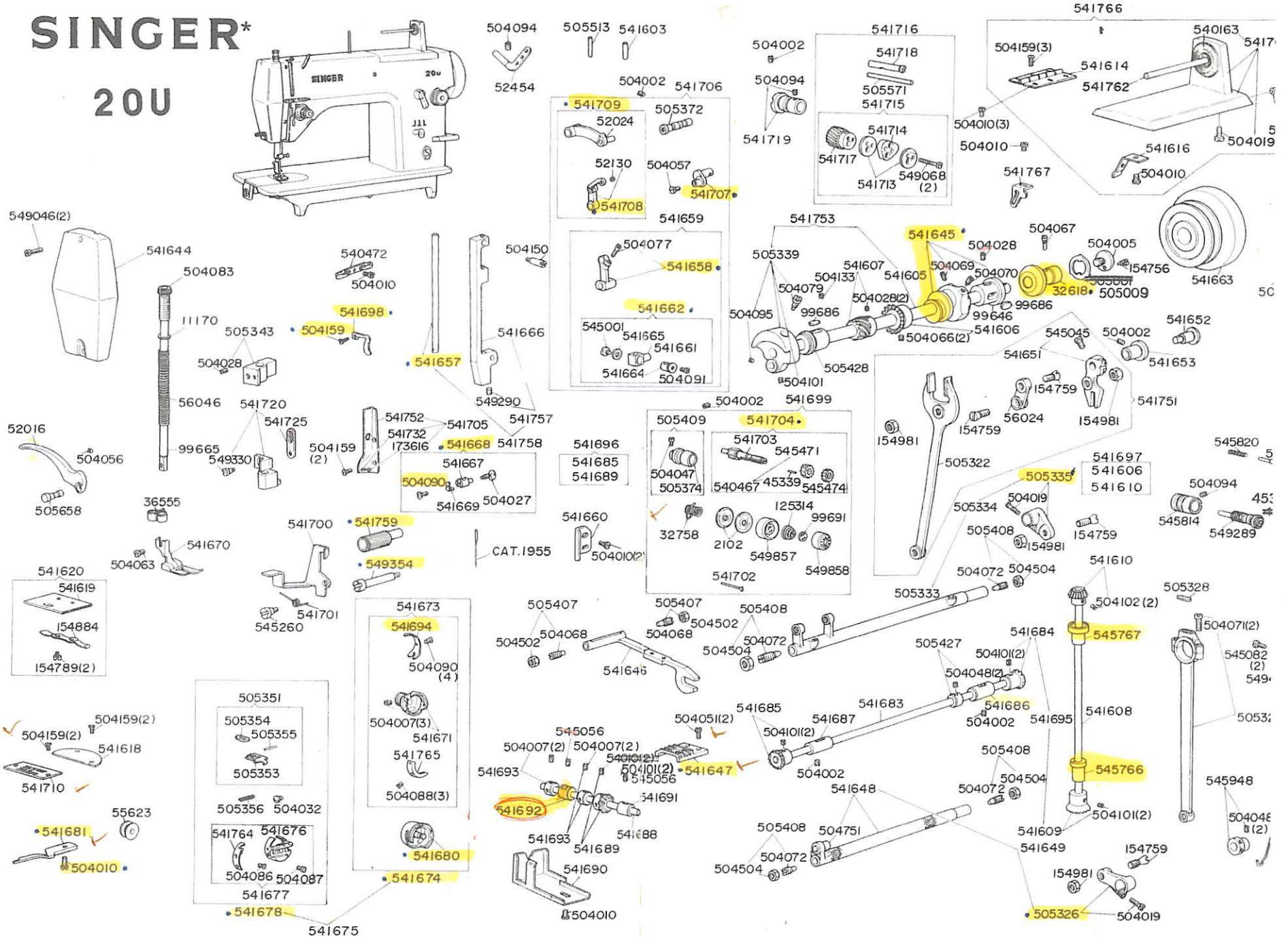

From the library of: Superior Sewing Machine & Supply LLC

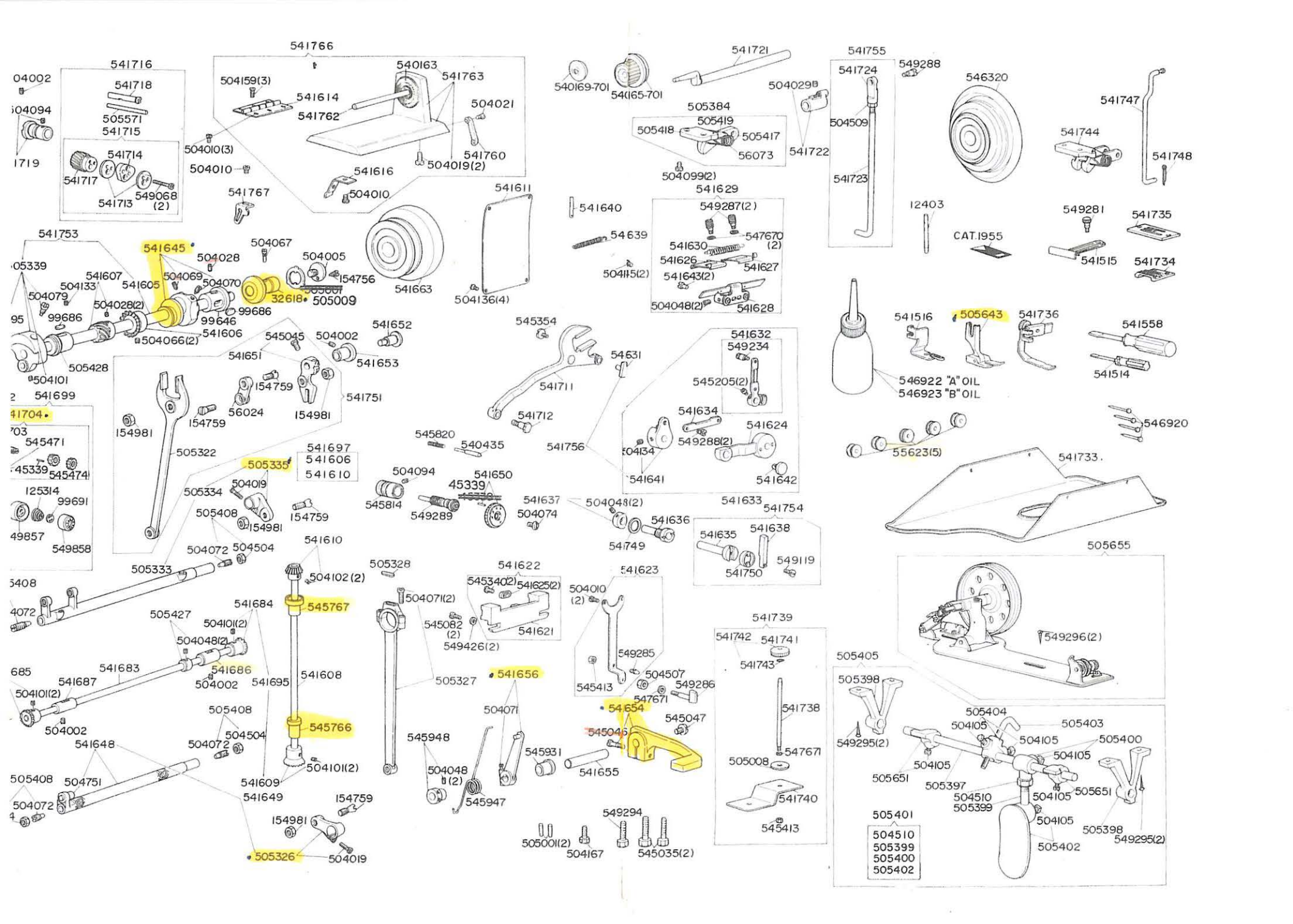

From the library of: Superior Sewing Machine & Supply LLC

NUMERICAL LIST OF PARTS FOR MACHINE 201

PART NO.	DESCRIPTION
2102	Tension Disc (2)
11170	Presser Bar Spring Washer
32618	Clamp Stop Motion Clamp Flanged Bushing
32758	Thread Take-up Spring
36555	Thread Cutter and Holder
45339	Feed Regulating Stud Head Stop Pin
45339	Tension Regulating Thumb Nut Engaging Pin
52016	Presser Bar Lifter
52024	Thread Take-up Lever Link
52130	Thread Take-up Lever Thread Eyelet Pushing
52454	Thread Retainer
55623	Rotating Hook Bobbin
56024	Feed Connecting Link
56046	Presser Bar Spring
56073	Bell Crank Spring
99646	Arm Shaft (horizontal) Flanged Pushing (back)
99665	Presser Bar (hollow)
99686	Arm Shaft (horizontal) Flanged Bushing (back and front) Oil Pad (felt) (2)
99691	Tension Indicator Flange Washer
125314	Tension Spring
154756 (851)	Clamp Stop Motion Clamp Stop Screw
154759 (850)	Feed Connecting Link Hinge Screw (2)
154759 (850)	Feed Forked Connection Hinge Screw
154759 (850)	Feed Lifting Rock Shaft Crank Connecting Rod Hinge Screw
154789 (809)	Bed Slide Spring Screw (2)
154884	Bed Slide Spring
154981 (819)	Feed Connecting Link Hinge Screw Nut (2)
154981 (819)	Feed Forked Connection Hinge Screw Nut
154981 (819)	Feed Lifting Rock Shaft Crank Connecting Rod Hinge Screw Nut
173616	Thread Guard (lower) Pivet
504002 (850)	Feed Regulator Hinge Stud Flanged Bushing Set Screw
504002 (850)	Rotating Hook Drive Shaft Bushing (back) Set Screw
504002 (850)	Rotating Hook Drive Shaft Bushing (front) Set Screw
504002 (850)	Thread Take-up Lever Link Hinge Pin Set Screw
504002 (850)	Thread Take-up Spring Regulator Set Screw
504002 (850)	Zigzag Triangular Cam Shaft Bushing Set Screw
504005 (852)	Clamp Stop Motion Clamp Screw
504007 (850)	Rotating Hook Set Screw (3)
504007 (850)	Rotating Hook Shaft Retainer Collar Screw (4)
504010 (829)	Arm Top Cover Hinge (outer) Set Screw (3)
504010 (829)	Arm Top Cover Shutting Plate Set Screw
504010 (829)	Arm Top Cover Shutting Spring Set Screw
504010 (829)	Right and L-C-R Position Lever Set Screw (2)
504010 (829)	Needle Bar Connecting Link Guide Screw (2)
504010 (829)	Rotating Hook Bobbin Case Holder Position Bracket Screw
504010 (829)	Rotating Hook Shaft Bevel Gear Cover Screw
504010 (829)	Thread Guard (upper) Set Screw
504019 (850)	Arm Top Cover Spool Holder Bracket Screw (2)
504019 (808)	Feed Lifting Rock Shaft Crank Clamping Screw
504019 (808)	Feed Rock Shaft Crank Clamping Screw
504021 (809)	Arm Top Cover Shutting Plate Link Hinge Screw
504027 (851)	Needle Clamp Thumb Screw
504028 (850)	Arm Shaft (horizontal) Flanged Pushing (back) Set Screw
504028 (850)	Arm Shaft (horizontal) Worm Gear Set Screw (2)
504028 (850)	Presser Bar Guide Bracket Set Screw
504029 (833)	Presser Bar Lifting Shaft Arm Set Screw
504032 (805)	Rotating Hook Bobbin Case Latch Stop Screw
504047 (830)	Tension Stud Set Screw
504048 (833)	Right Amplitude Slide Block Crank Shaft Bushing Collar Set Screw (2)
504048 (833)	Right Amplitude Stop Stud Set Screw (2)
504048 (833)	Feed Reverse Lever Hinge Stud Collar Set Screw (2)
504048 (833)	Rotating Hook Drive Shaft Retainer Collar Screw (2)
504051 (850)	Feed Dog Screw (2)
504056 (830)	Presser Bar Lifter Pin Set Screw
504057 (805)	Needle Bar Connecting Link Cap Screw
504063 (825)	Presser Foot Screw
504066 (833)	Arm Shaft (horizontal) Bevel Gear Set Screw (2)
504067 (850)	Clamp Stop Motion Clamp Flanged Bushing Set Screw
504068 (803)	Feed Bar Screw Center (2)
504069 (833)	Feed and Feed Lifting Eccentric Position Screw

PART NO.	DESCRIPTION
504070 (850)	Feed and Feed Lifting Eccentric Set Screw
504071 (833)	Feed Lifting Rock Shaft Crank Connecting Rod Cap Screw (2)
504071 (833)	Feed Reverse Lever Link Clamping Screw
504072 (803)	Feed Lifting Rock Shaft Screw Center (2)
504072 (803)	Feed Rock Shaft Screw Center (2)
504074 (852)	Feed Regulating Stud Head Cap Screw
504077 (803)	Needle Bar Connecting Link Adjusting Screw
504079 (830)	Needle Bar Crank Position Screw
504083 (852)	Presser Regulating Thumb Screw
504086 (806)	Rotating Hook Bobbin Case Tension Regulating Screw
504087 (806)	Rotating Hook Bobbin Case Tension Spring Screw
504088 (803)	Rotating Hook Section Screw (3)
504090 (803)	Needle Clamp Thread Guard Set Screw
504090 (803)	Rotating Hook Thread Guard Screw (4)
504091 (803)	Needle Bar Set Screw
504094 (850)	Feed Regulating Stud Bushing Set Screw
504094 (850)	Thread Retainer Set Screw
504094 (850)	Zigzag Triangular Cam Shaft Set Screw
504095 (850)	Thread Take-up Crank Position Screw
504099 (809)	Bell Crank Bracket Screw (2)
504101 (850)	Arm Shaft (upright) Bevel Gear (lower) Set Screw (2)
504101 (850)	Rotating Hook Drive Shaft Bevel Gear (back) Set Screw (2)
504101 (850)	Rotating Hook Drive Shaft Bevel Gear (front) Set Screw (2)
504101 (850)	Rotating Hook Shaft Bevel Gear Set Screw (2)
504101 (850)	Thread Take-up Crank Set Screw
504102 (833)	Arm Shaft (upright) Bevel Gear (upper) Set Screw (2)
504133 (850)	Arm Shaft (horizontal) Flanged Pushing (front) Set Screw
504134 (803)	Right Amplitude Slide Block Guide Stud Set Screw
504136 (825)	Arm Side Cover Set Screw (4)
504145 (809)	Right Amplitude Regulating Plate Holder Set Screw (2)
504150 (805)	Needle Bar Frame Hinge Screw
504159 (819)	Arm Top Cover Hinge (inner) Set Screw (3)
504159 (819)	Bed Plate Screw (2)
504159 (819)	Slack Thread Regulator Set Screw
504159 (819)	Thread Guard (lower) Set Screw (2)
504159 (819)	Throat Plate Screw (2)
504167 (805)	Arm Screw (small)
504502 (819)	Feed Bar Screw Center Nut (2)
504501 (819)	Feed Lifting Rock Shaft Screw Center Nut (2)
504504 (819)	Feed Rock Shaft Screw Center Nut (2)
504507 (809)	Right and L-C-R Position Lever Thumb Stud Nut
504509 (809)	Presser Bar Lifting Shaft Arm Connecting Rod Nut
504751	Feed Lifting Rock Shaft Roller and Stud
505001	Arm Dowel Pin (2)
505009	Clamp Stop Motion Clamp Washer
505322	Feed Forked Connection
505326	Feed Lifting Rock Shaft Crank with 504019
505327	Feed Lifting Rock Shaft Crank Connecting Rod with two 504071
505328	Feed Lifting Rock Shaft Crank Connecting Rod Cap Oil Pad (felt)
505333	Feed Rock Shaft
505334	Feed Rock Shaft complete, Nos. 505333 and 505335
505335	Feed Rock Shaft Crank with 504019
505339	Needle Bar Crank with 504079, 504095 and 504101
505343	Presser Bar Guide Bracket with 504028
505351	Rotating Hook Bobbin Case Hinge Nos. 505353, 505354 and 505355
505353	Rotating Hook Bobbin Case Latch
505354	Rotating Hook Bobbin Case Latch Lever
505355	Rotating Hook Bobbin Case Latch Lever Fulcrum Pin
505356	Rotating Hook Bobbin Case Latch Spring
505372	Thread Take-up Lever Link Hinge Pin
505374	Thread Take-up Spring Regulator
505384	Bell Crank complete, Nos. 56073, 505417, 505418 and 505419
505407	Feed Bar Screw Center 504068 with 504502 (2)
505408	Feed Lifting Rock Shaft Screw Center 504072 with 504504 (2)
505408	Feed Rock Shaft Screw Center 504072 with 504504 (2)

From the library of: Superior Sewing Machine & Supply LLC

NUMERICAL LIST OF PARTS FOR MACHINE 20U

PART NO.	DESCRIPTION
505409	Thread Take-up Spring Regulator 505374 with 504047
505417	Bell Crank
505418	Bell Crank Bracket
505419	Bell Crank Hinge Pin
505427	Rotating Hook Drive Shaft Retainer Collar with two 504048
505428	Arm Shaft (horizontal) Flanged Bushing (front)
505513	Arm Oil Tube Packing (cotton)
505571	Zigzag Triangular Cam Shaft Oil Wick
505658	Presser Bar Lifter Pin
540163	Arm Top Cover Spool Holder Cushion
540435	Feed Regulating Stud Lock Pin
540467	Tension Regulating Thumb Nut 545471 with 45339
540472	Thread Guard (upper)
541603	Arm Oil Tube (for thread take-up lever link)
541605	Arm Shaft (horizontal)
541606	Arm Shaft (horizontal) Bevel Gear with two 504066
541607	Arm Shaft (horizontal) Worm Gear with two 504028
541608	Arm Shaft (upright)
541609	Arm Shaft (upright) Bevel Gear (lower) with two 504101
541610	Arm Shaft (upright) Bevel Gear (upper) with two 504102
541611	Arm Side Cover
541614	Arm Top Cover Hinge
541616	Arm Top Cover Shutting Spring
541618	Bed Plate
541619	Bed Slide
541620	Bed Slide complete, Nos. 541619, 154884 and two 154789
541621	Bight and L-C-R Position Block
541622	Bight and L-C-R Position Block complete, Nos. 541621, two each 541625 and 545082
541623	Bight and L-C-R Position Lever with 549285 and 545413
541624	Bight and L-C-R Position Lever Arm
541625	Bight and L-C-R Position Lever Stop Plate (2)
541626	Bight Amplitude Regulating Plate (left)
541627	Bight Amplitude Regulating Plate (right)
541628	Bight Amplitude Regulating Plate Holder
541629	Bight Amplitude Regulating Plate Holder and Bight Amplitude Regulating Plate, Nos. 541626, 541627, 541628, 541630 and two each 504048, 541643, 541670, 549287
541630	Bight Amplitude Regulating Plate Spring
541631	Bight Amplitude Slide Block
541632	Bight Amplitude Slide Block Crank with 549234 and two 545205
541633	Bight Amplitude Slide Block Crank 541632 with 541634, 541641, 541624, 541642 and two 549288
541634	Bight Amplitude Slide Block Crank Link
541635	Bight Amplitude Slide Block Crank Shaft
541636	Bight Amplitude Slide Block Crank Shaft Bushing
541637	Bight Amplitude Slide Block Crank Shaft Bushing Collar with two 504048
541638	Bight Amplitude Slide Block Crank Shaft Knob
541639	Bight Amplitude Slide Block Crank Spring
541640	Bight Amplitude Slide Block Crank Spring Bracket
541641	Bight Amplitude Slide Block Guide with 504134
541642	Bight Amplitude Slide Block Guide Stud
541643	Bight Amplitude Stop Stud (2)
541644	Face Plate
541645	Feed and Feed Lifting Eccentric with 504069 and 504070
541646	Feed Bar
541647	Feed Dog
541648	Feed Lifting Rock Shaft with 504751
541649	Feed Lifting Rock Shaft complete, Nos. 541648 and 505326
541650	Feed Regulating Stud Head with 45339
541651	Feed Regulator with 545045
541652	Feed Regulator Hinge Stud
541653	Feed Regulator Hinge Stud Flanged Bushing
541654	Feed Reverse Lever with 545046
541655	Feed Reverse Lever Hinge Stud
541656	Feed Reverse Lever Link with 504071
541657	Needle Bar (hollow)
541658	Needle Bar Connecting Link with 504077
541659	Needle Bar Connecting Link 541658 with 541662
541660	Needle Bar Connecting Link Guide
541661	Needle Bar Connecting Stud
541662	Needle Bar Connecting Stud complete, Nos. 504091 545001, 541661, 541664 and 541665
541663	Hand Wheel (disc 2-1/4 in. dia.) (for electric drive)
541664	Needle Bar Connecting Stud Hinge Pin
541665	Needle Bar Connecting Stud Hinge Pin Washer
541666	Needle Bar Frame
541667	Needle Clamp
541668	Needle Clamp complete, Nos. 541667, 541669, 504090 and 504027
541669	Needle Clamp Thread Guard
541670	Presser Foot (spring hinged)
541671	Rotating Hook with three 504007
541673	Rotating Hook complete, Nos. 541671, 541675, 541694, three 504088 and four 504090 (for agents only)
541674	Rotating Hook 541673 with 541680
541675	Rotating Hook 541674 with 541678
541676	Rotating Hook Bobbin Case
541677	Rotating Hook Bobbin Case 541676 with 541764, 504086 and 504087
541678	Rotating Hook Bobbin Case complete, Nos. 504032 541677, 505351 and 505356
541679	Rotating Hook Bobbin Case 541678 with 541680 (for agents only)
541680	Rotating Hook Bobbin Case Holder
541681	Rotating Hook Bobbin Case Holder Position Bracket
541683	Rotating Hook Drive Shaft
541684	Rotating Hook Drive Shaft Bevel Gear (back) with two 504101
541685	Rotating Hook Drive Shaft Bevel Gear (front) with two 504101
541686	Rotating Hook Drive Shaft Bushing (back)
541687	Rotating Hook Drive Shaft Bushing (front)
541688	Rotating Hook Shaft
541689	Rotating Hook Shaft Bevel Gear with two 504101
541690	Rotating Hook Shaft Bevel Gear Cover
541691	Rotating Hook Shaft Bushing (long)
541692	Rotating Hook Shaft Bushing (short)
541693	Rotating Hook Shaft Retainer Collar with two 504007 (2)
541694	Rotating Hook Thread Guard
541695	Set of Gears (lower, back) Nos. 541684 and 541609
541696	Set of Gears (lower, front) Nos. 541685 and 541689
541697	Set of Gears (upper) Nos. 541606 and 541610
541698	Slack Thread Regulator
541699	Tension complete, Nos. 32758, 99691, 125314, 505409, 541702, 541704, 549857, 549858 and two 2102
541700	Tension Releasing Lever
541701	Tension Releasing Lever Spring
541702	Tension Releasing Pin
541703	Tension Stud
541704	Tension Stud 541703 with 540467 and 545474
541705	Thread Guard (lower) complete, Nos. 541732, 173616 and 541752
541706	Thread Take-up complete, Nos. 541709, 504057, 541695, 541707 and 505372
541707	Thread Take-up Crank
541708	Thread Take-up Lever with 52130
541709	Thread Take-up Lever complete, Nos. 541708 and 52024
541710	Throat Plate
541711	Zigzag Stitch Regulator Fork
541712	Zigzag Stitch Regulator Fork Eccentric Connection Pin
541713	Zigzag Stitch Regulator Fork Retaining Washer (2)
541714	Zigzag Triangular Cam
541715	Zigzag Triangular Cam complete, Nos. 541714, 541717, two each 549068 and 541713
541716	Zigzag Triangular Cam and Zigzag Triangular Cai Shaft complete, Nos. 541715, 541718 and 5055
541717	Zigzag Triangular Cam Gear
541718	Zigzag Triangular Cam Shaft
541719	Zigzag Triangular Cam Shaft Bushing with 50409

From the library of: Superior Sewing Machine & Supply LLC

PART NO.	DESCRIPTION
541720	Presser Bar Lifting Bracket with 541725 and 549330
541721	Presser Bar Lifting Shaft
541722	Presser Bar Lifting Shaft Arm with 504029
541723	Presser Bar Lifting Shaft Arm Connecting Rod
541724	Presser Bar Lifting Shaft Arm Connecting Rod Joint
541725	Presser Bar Lifting Shaft Link
541732	Thread Guard (lower)
541749	Bight Amplitude Slide Block Crank Shaft Bushing Washer
541750	Bight Amplitude Slide Block Crank Shaft Ring
541751	Feed Forked Connection 505322 with 56024, 541651, two each 154981 and 154759
541752	Thread Guard (lower) Bracket (body)
541753	Arm Shaft (horizontal) and Needle Bar Crank complete, Nos. 541605 and 505339
541754	Bight Amplitude Slide Block Crank Shaft Knob 541638 with 541635, 549119 and 541750
541755	Presser Bar Lifting Shaft Arm Connecting Rod 541723 with 541724 and 504509
541756	Bight Amplitude Slide Block Guide 541641 with 541631
541757	Needle Bar Frame 541666 with 549290
541758	Needle Bar (hollow) 541657 with 541757
541759	Needle Bar Frame Clamping Stud
541760	Arm Top Cover Shutting Plate Link
541762	Arm Top Cover Spool Holder
541763	Arm Top Cover with Spool Holder Bracket, Nos. 540163 and two 504019
541764	Rotating Hook Bobbin Case Tension Spring
541765	Rotating Hook Section
541766	Arm Top Cover complete, Nos. 504010, 504021, 541614, 541616, 541760, 541762, 541763 and three 504159
541767	Arm Top Cover Shutting Plate
545001 (819)	Needle Bar Connecting Stud Hinge Pin Screw
545035 (805)	Arm Screw (2)
545045 (833)	Feed Regulator Hinge Stud Set Screw
545046 (809)	Feed Reverse Lever Set Screw
545047 (850)	Feed Reverse Lever Hinge Stud Cap Screw
545056 (833)	Rotating Hook Shaft Bushing (long) Set Screw
545056 (833)	Rotating Hook Shaft Bushing (short) Set Screw
545082 (803)	Bight and L-C-R Position Block Set Screw (2)
545205 (833)	Bight Amplitude Slide Block Crank Set Screw (2)
545260 (806)	Tension Releasing Lever Hinge Screw
545340 (806)	Bight and L-C-R Position Lever Stop Plate Set Screw (2)
545354 (804)	Bight Amplitude Slide Block Cap Screw
545413 (803)	Bight and L-C-R Position Lever Screw Pin Nut
545471 (828)	Tension Regulating Thumb Nut
545474 (873)	Tension Regulating Thumb Nut Lock Nut
545766	Arm Shaft (upright) Bushing (lower)
545767	Arm Shaft (upright) Bushing (upper)
545814	Feed Regulating Stud Bushing
545820	Feed Regulating Stud Lock Pin Spring
545931	Feed Reverse Lever Hinge Stud Flanged Bushing
545947	Feed Reverse Lever Link Spring
545948	Feed Reverse Lever Hinge Stud Collar with two 504048
546320	Hand Wheel (for treadle drive)
547670	Bight Amplitude Regulating Plate Thumb Screw Washer (2)
547671	Bight and L-C-R Position Lever Thumb Stud Nut Spring Washer
549046 (853)	Face Plate Screw (2)
549068 (803)	Zigzag Triangular Cam Set Screw (2)
549119 (850)	Bight Amplitude Slide Block Crank Shaft Knob Set Screw
549234 (809)	Bight Amplitude Slide Block Crank Screw Pin
549285 (803)	Bight and L-C-R Position Lever Screw Pin
549286 (819)	Bight and L-C-R Position Lever Thumb Stud
549287 (832)	Bight Amplitude Regulating Plate Thumb Screw (2)
549288 (830)	Bight Amplitude Slide Block Crank Link Hinge Screw (2)
549288 (830)	Presser Bar Lifting Shaft Arm Connecting Rod Joint Hinge Screw
549289 (803)	Feed Regulating Stud
549290 (819)	Zigzag Stitch Regulator Fork Eccentric Connection Pin Set Screw
549294 (805)	Arm Screw
549330 (810)	Presser Bar Lifting Shaft Link Hinge Screw
549354 (850)	Needle Bar Frame Clamping Stud Screw
549426	Bight and L-C-R Position Block Washer (2)
549857	Tension Indicator
549858	Tension Indicator Flange
Cat. No. 1955	Needle (size No. 14) with Pontoon C.A.E.

ACCESSORIES

12403	Arm Spool Pin and Thread Eyelet
55623	Rotating Hook Bobbin (5)
505008	Bobbin Winder Spool Pin Washer (felt)
505643	Presser Foot (spring hinged) complete, (for straight stitching)
505655	Universal Bobbin Winder complete, with two 549296
540165 (701)	Arm Top Cover Spool Holder Thread Lead-off (large)
540169 (701)	Arm Top Cover Spool Holder Thread Lead-off (small)
541514	Screw Driver (small)
541515	Cloth Guide
541516	Hemmer Foot (1/8 in. hem)
541558	Screw Driver (large)
541734	Feed Dog (for straight stitching)
541735	Throat Plate (for straight stitching)
541736	Zipper Foot
541738	Bobbin Winder Spool Pin
541739	Bobbin Winder Spool Pin complete, Nos. 541738, 547671, 505008, 541740, 541742 and 545413
541740	Bobbin Winder Spool Pin Bracket
541741	Bobbin Winder Spool Presser Plate (body)
541742	Bobbin Winder Spool Presser Plate complete, Nos. 541741 and 541743
541743	Bobbin Winder Spool Presser Plate O-Ring
545413 (850)	Bobbin Winder Spool Pin Nut
546922	Oiler (130 cc, filled with Singer Type "A" Oil) (for treadle drive)
546923	Oiler (130 cc, filled with Singer Type "B" Oil) (for electric drive)
547671	Bobbin Winder Spool Pin Spring Washer
549281 (802)	Cloth Guide Screw
549296 (819)	Bobbin Winder Wood Screw (5.5 x 19) (2)
Cat. No. 1955	Needle (size No. 14) with Pontoon C.A.E. (3)

KNEE LIFTER PARTS

(Supplied at an additional charge)

504105 (809)	Rock Shaft Knee Arm Hub Set Screw
504105 (809)	Rock Shaft Knee Plate Set Screw
504105 (809)	Rock Shaft Lifting Arm Hub Set Screw
504105 (809)	Rock Shaft Lifting Arm Set Screw
504105 (809)	Rock Shaft Stop Dog Set Screw (2)
504510 (809)	Rock Shaft Knee Arm Clamping Nut
505397	Rock Shaft
505398	Rock Shaft Hanger (2)
505399	Rock Shaft Knee Arm
505400	Rock Shaft Knee Arm Hub with 504105
505401	Rock Shaft Knee Arm complete, Nos. 504510, 505399, 505400 and 505402
505402	Rock Shaft Knee Plate with 504105
505403	Rock Shaft Lifting Arm
505404	Rock Shaft Lifting Arm Hub with two 504105
505405	Rock Shaft complete, Nos. 505397, 505401, 505403, 505404, two each 505398, 505651, and four 549295
505651	Rock Shaft Stop Dog with 504105 (2)
549295 (819)	Rock Shaft Hanger Wood Screw (1 in. No. 9) (4)

DRIP PAN

(Supplied at an additional charge)

541733	Drip Pan with four 546920
546920	Drip Pan Nail (No. 16 x 25) (4)

BIGHT AMPLITUDE KNEE CONTROLLER

(Supplied at an additional charge)

541744	Bight Amplitude Slide Block Crank Knee Operating Bell Crank
541747	Bight Amplitude Slide Block Crank Knee Operating Connection
541748	Bight Amplitude Slide Block Crank Knee Operating Connection Cutter Pin

From the library of: Superior Sewing Machine & Supply LLC

ALTERATIONS - 20U PARTS CHART FORM U209

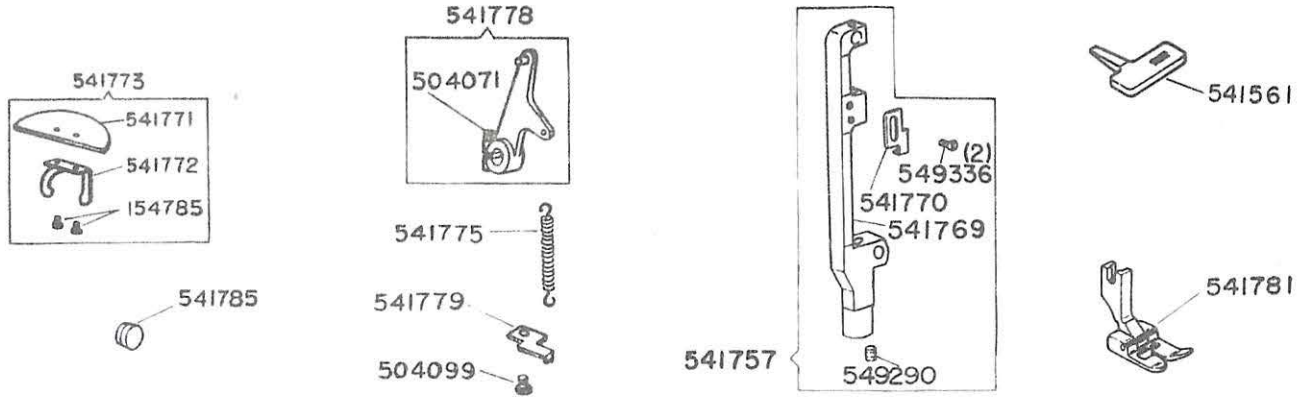

Alter:	504002	(850)	Feed Regulator Hinge Stud Flanged Bushing Set Screw	to 504029 (833)
	504051	(850)	Feed Dog Screw (2)	to 549376 (850)
	504079	(830)	Needle Bar Crank Position Screw	to 504120 (803)
	504134	(803)	Bight Amplitude Slide Block Guide Stud Set Screw	to 545098 (850)
	504136	(825)	Arm Side Cover Set Screw (4)	to 549336 (825)
	541618		Bed Plate	to 541771
	541638		Bight Amplitude Slide Block Crank Shaft Knob	to 541774
	541644		Face Plate	to 541768
	541655		Feed Reverse Lever Hinge Stud	to 541780
	541656		Feed Reverse Lever Link with 504071	to 541778
	541666		Needle Bar Frame	to 541769
	541710		Throat Plate	to 541783
	541765		Rotating Hook Section	to 505360
	545205	(833)	Bight Amplitude Slide Block Crank Set Screw (2)	to 545246 (803)
	549046	(853)	Face Plate Screw (2)	to 545386 (850)
Delete:	504048	(833)	Feed Reverse Lever Hinge Stud Collar Set Screw (2)	
	504159	(819)	Bed Plate Screw (2)	
	545947		Feed Reverse Lever Link Spring	
	545948		Feed Reverse Lever Hinge Stud Collar with two 504048	
Add:	154785	(809)	Bed Plate Bracket Screw (2)	
	504099		Feed Reverse Lever Return Spring Bracket Screw	
	541770		Needle Bar Timing Indicator Plate	
	541772		Bed Plate Bracket	
	541773		Bed Plate Complete Nos. 541771, 541772 and two 154785	
	541775		Feed Reverse Lever Return Spring	
	541779		Feed Reverse Lever Return Spring Bracket (hook)	
	541785		Arm Plug	
	549336	(825)	Needle Bar Timing Indicator Plate Screw (2)	

ATTACHMENT and ACCESSORIES

Alter:	541670	Presser Foot (spring hinged)	to 541566
Add:	541561	Screw Driver	
	541781	Presser Foot (for buttonholing)	

* A Trademark of THE SINGER COMPANY
Form U209 (1071)

Copyright © 1971 THE SINGER COMPANY
All Rights Reserved Throughout the World

From the library of: Superior Sewing Machine & Supply LLC